Homogenization of PDEs with localization: The case of degradation

Bendix Koopmann

16. Oktober 2013

Inhaltsverzeichnis

Introduction

Degradation of IPU

- native degradation

enhanced by

- specialized bacteria
- carried at Seramis granulate

Situation to model:

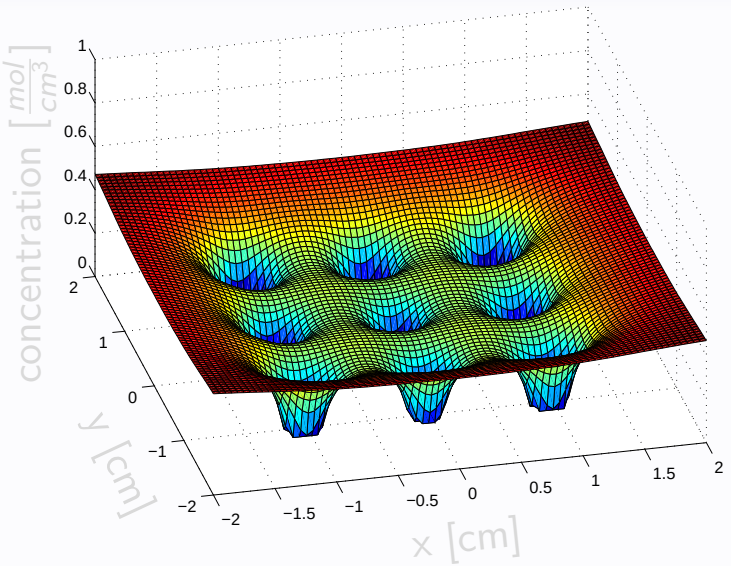

Introduction

Degradation of IPU

- native degradation

enhanced by

- specialized bacteria
- carried at Seramis granulate

Situation to model:

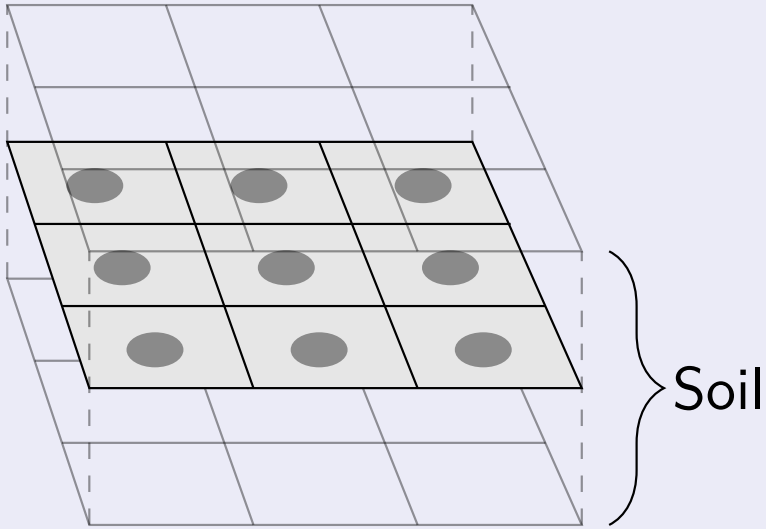

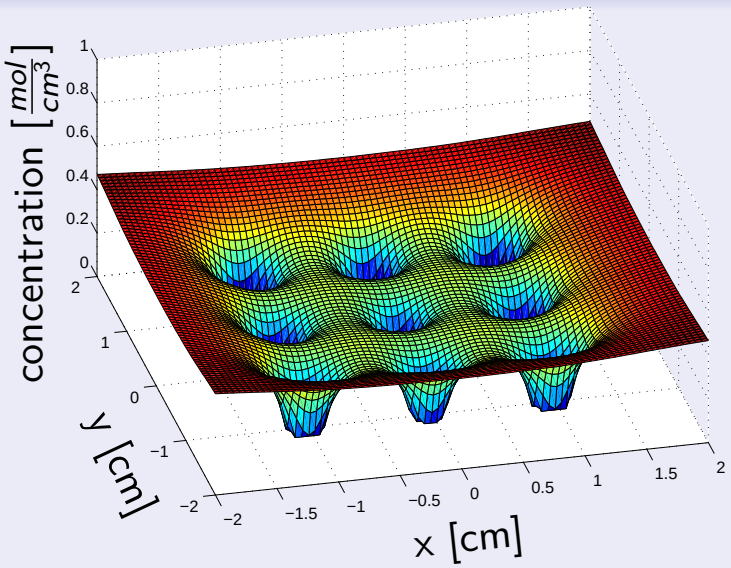

The Model

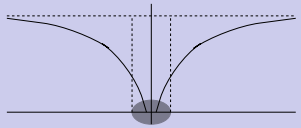

IPU gradient respecting a single Seramis particle

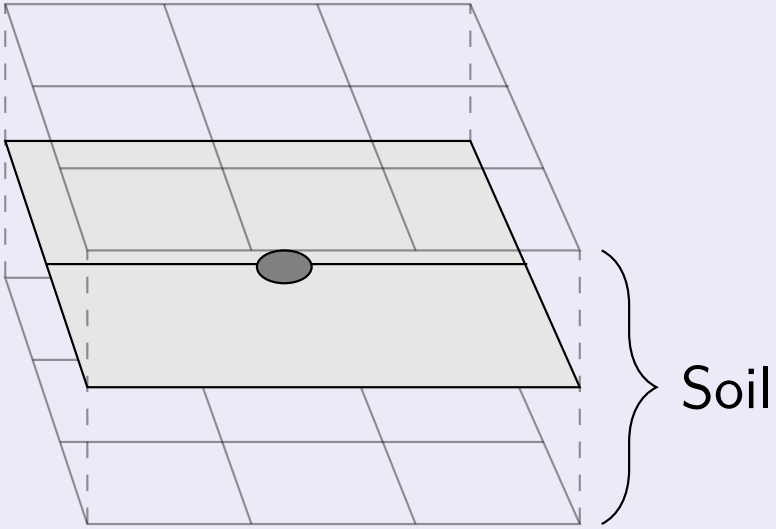

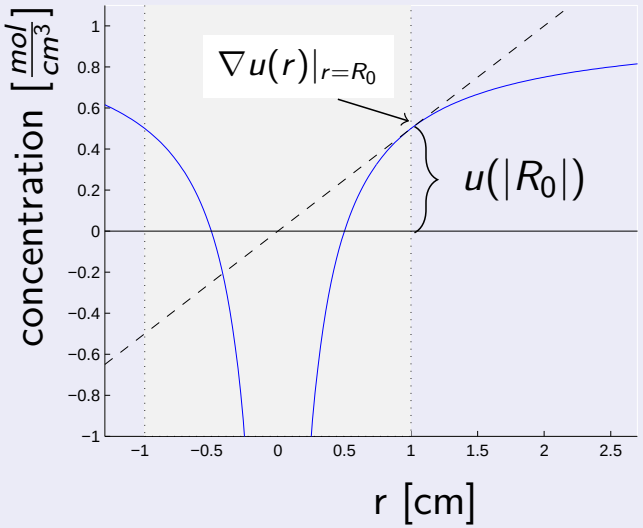

Basic Model

$$u_t = D\Delta u - \gamma u, \quad u(0,x) = u_0, \quad \nabla u(t,x) \underset{|x|\to\infty}{\to} 0$$

$$D\nabla u|_{\partial\Omega_i} = \underbrace{\alpha u}_{J}|_{\partial\Omega_i}, \quad i = 1, \quad x_1 = 0$$

where $\Omega = \mathbb{R}^3 \setminus \bigcup \Omega_i, \quad \Omega_i = \{|x - x_i| \leq R\}$

The Model

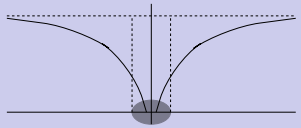

IPU gradient respecting a single Seramis particle

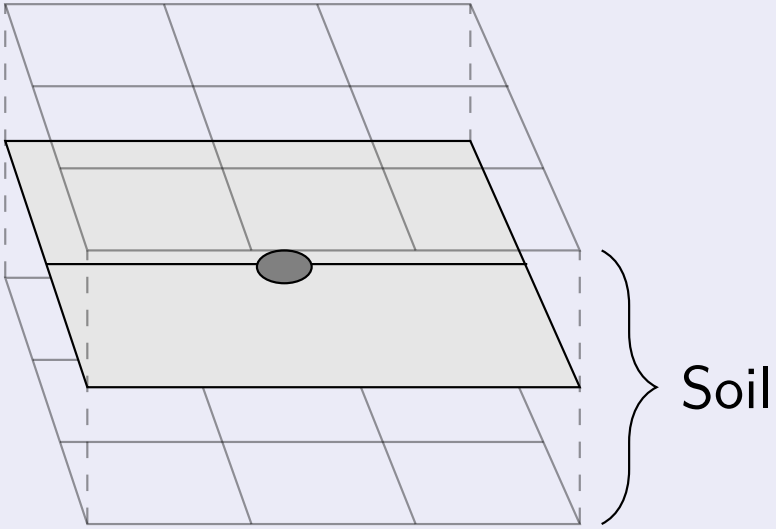

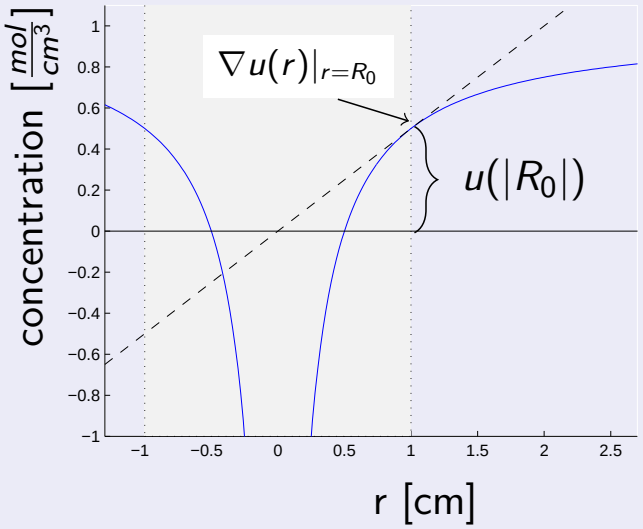

Basic Model

$$u_t = D\Delta u - \gamma u, \quad u(0,x) = u_0, \quad \nabla u(t,x) \underset{|x|\to\infty}{\to} 0$$

$$D\nabla u\big|_{\partial\Omega_i} = \underbrace{\alpha u}_{J}\big|_{\partial\Omega_i}, \quad i = 1, \quad x_1 = 0$$

where $\Omega = \mathbb{R}^3 \setminus \bigcup \Omega_i, \quad \Omega_i = \{|x - x_i| \leq R\}$

Introduction

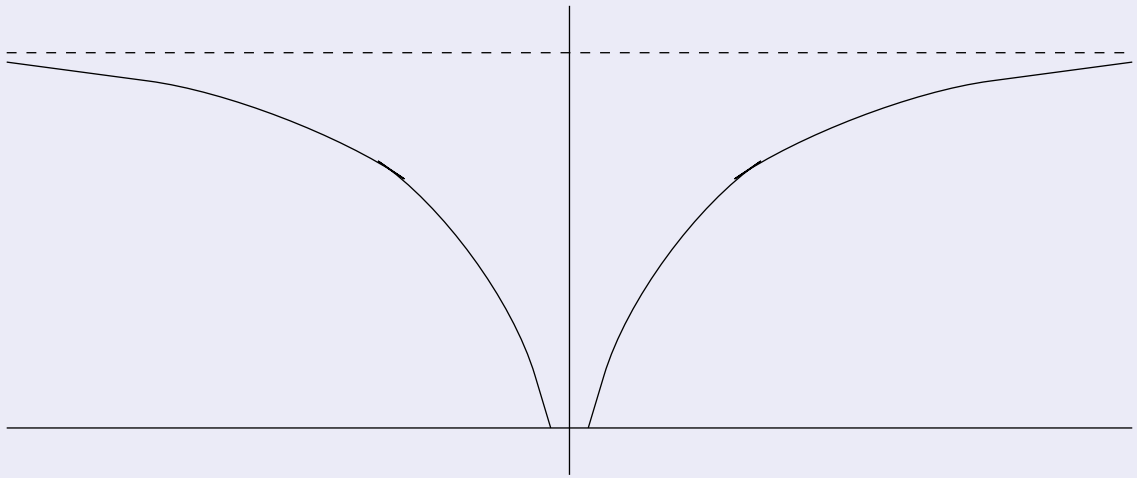

Graphic's description - case $t \to \infty$

- Constant IPU-Level + IPU-sink (seramis)
- Fundamental solution $u(x) = \frac{-c}{x} + u_0$.

Introduction

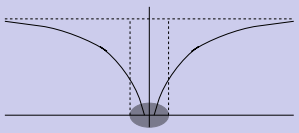

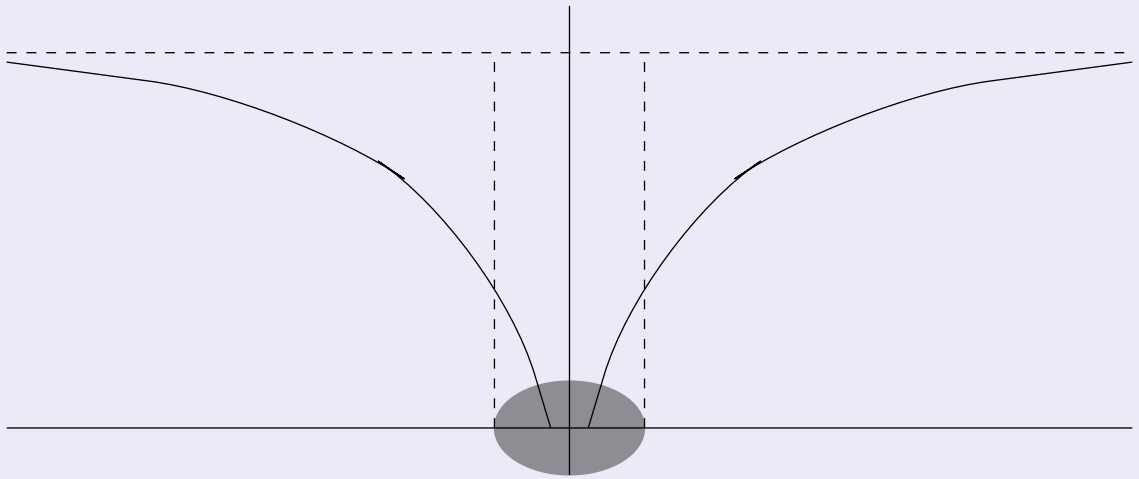

Graphic's description - the seramis

- no negative concentration outside seramis
- the system is controlled by the seramis' boundary.

Introduction

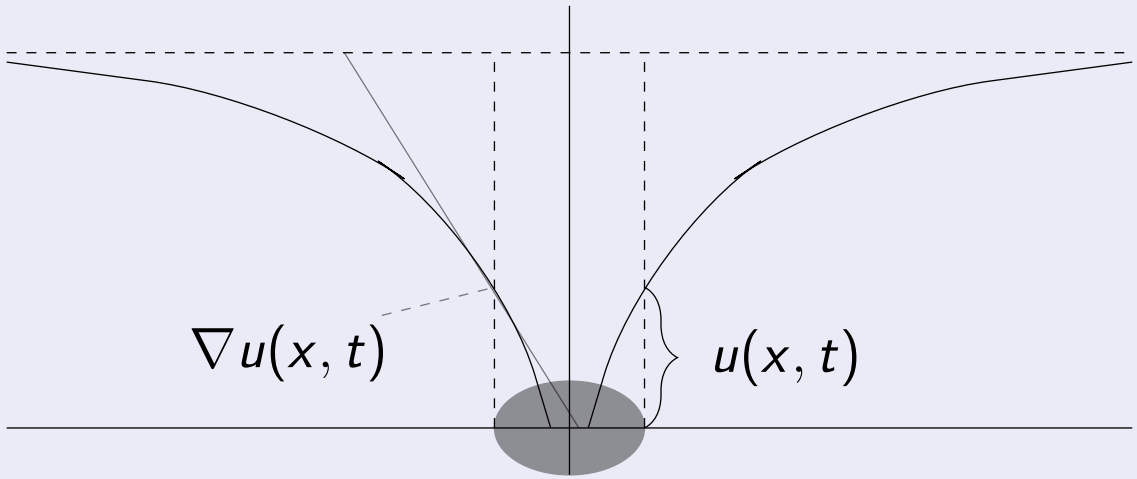

Mathematical essence

- diffusion $0 = D\Delta u$ (Laplace Equation).
- boundary $D\frac{du}{dr}|_{r=R} = \alpha u|_{r=R}$.

Laplace - Power series

Multiple seramis

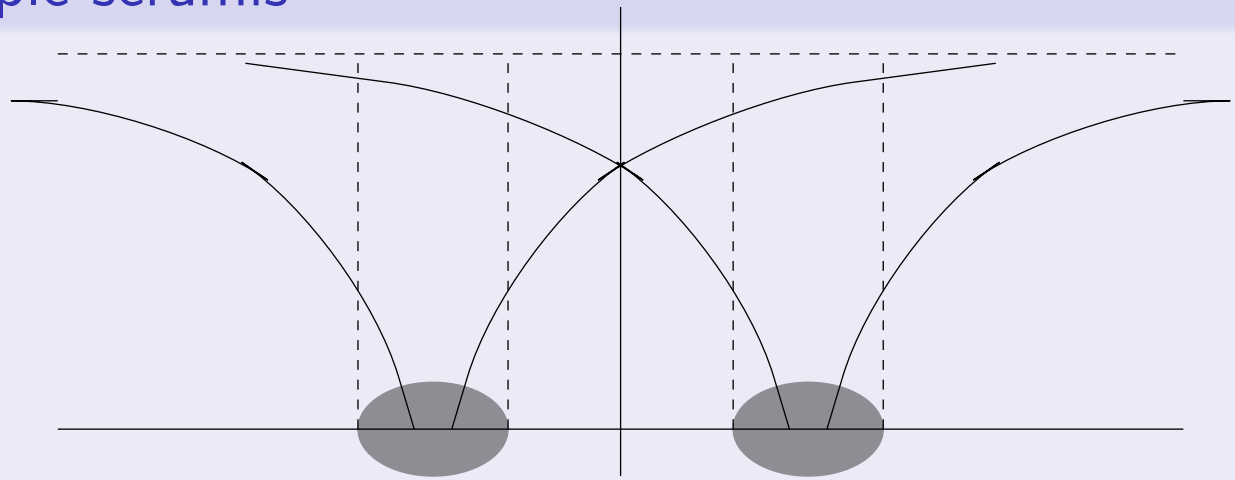

Problem

seramis don't communicate yet.

solution → correction term determined by power series.

Laplace - Power series

Multiple seramis

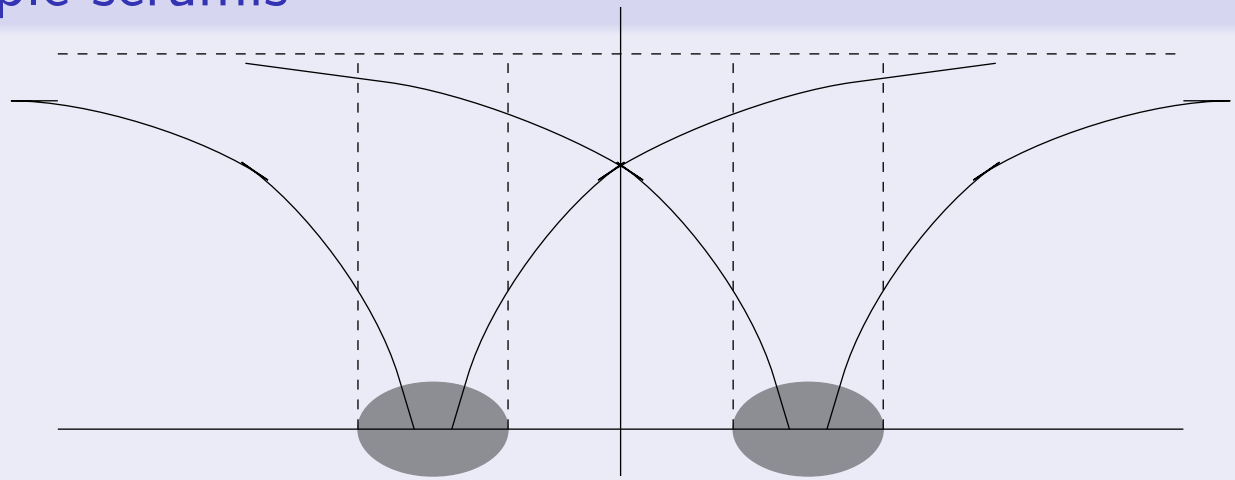

Problem

seramis don't communicate yet.

solution $\rightarrow$ correction term determined by power series.

Introduce Time - The Heat Equation

The Difference

- Laplace: $0 = \Delta u$
- Heat Eq.: $u_t = \Delta u$
- + native degradation $u_t = \Delta u - \gamma u$

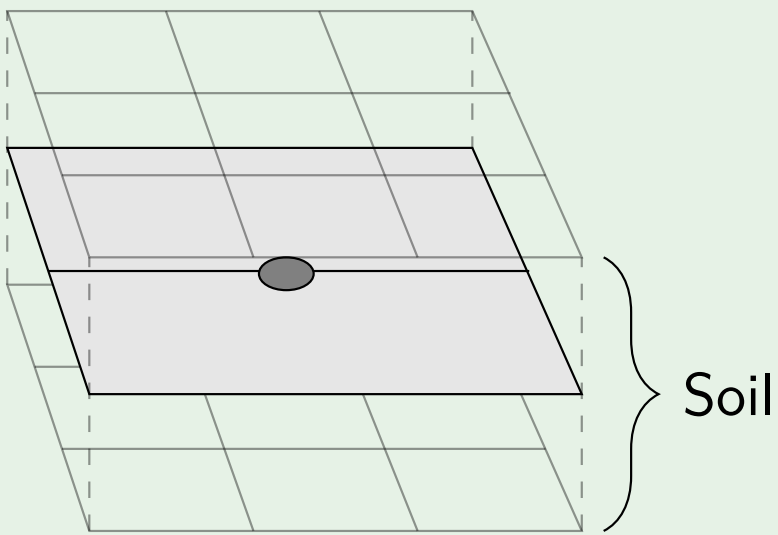

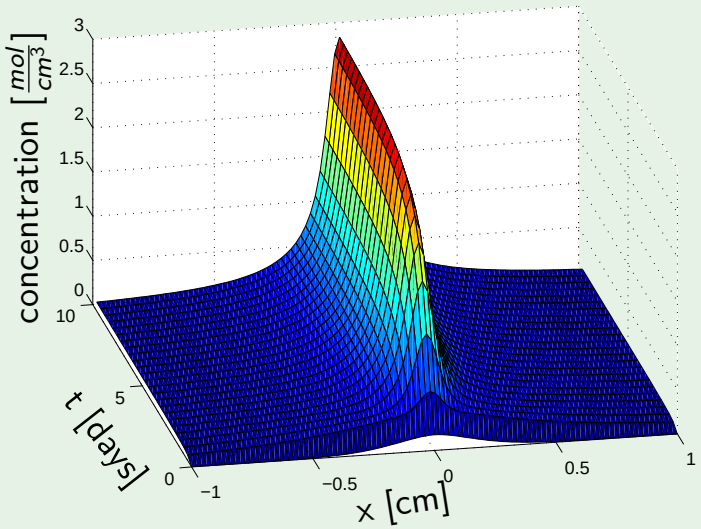

Introduce Time - The Heat Equation

The Difference

- Laplace: $0 = \Delta u$
- Heat Eq.: $u_t = \Delta u$
- $+$ native degradation $u_t = \Delta u - \gamma u$

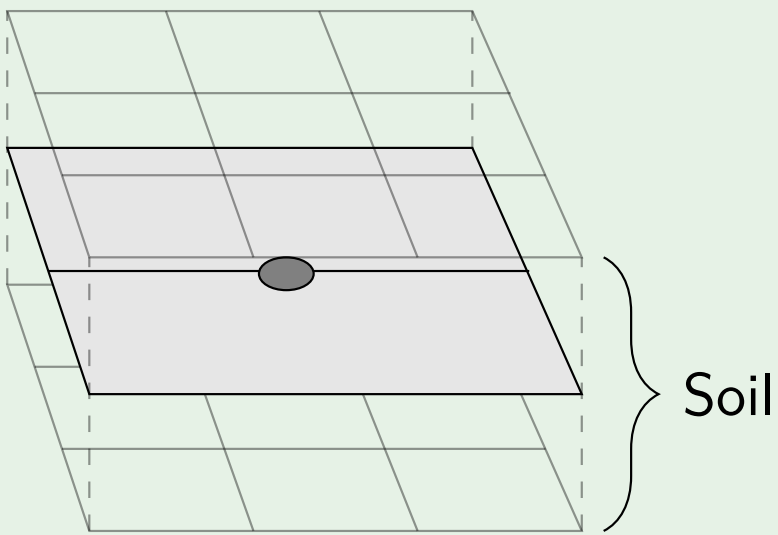

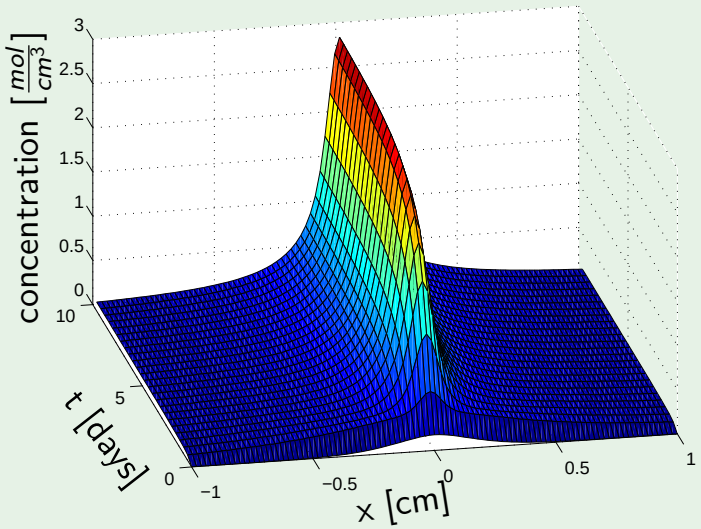

Introduce Time - The Heat Equation

The Difference

- Laplace: $0 = \Delta u$
- Heat Eq.: $u_t = \Delta u$
- $+$ native degradation $u_t = \Delta u - \gamma u$

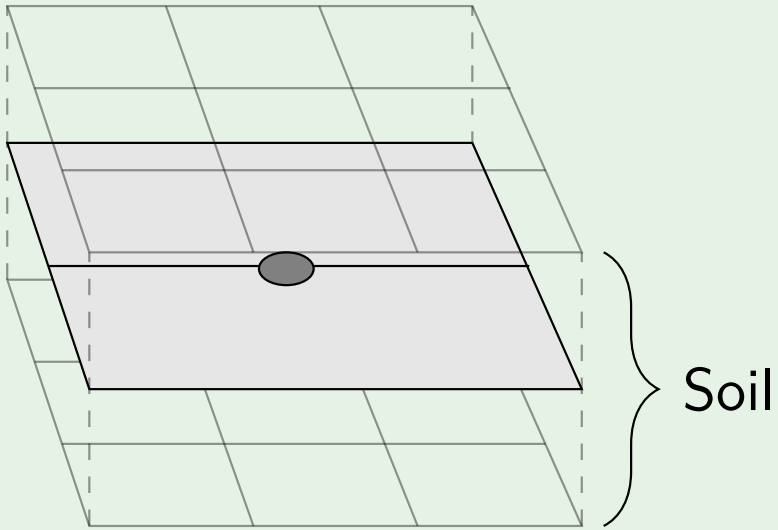

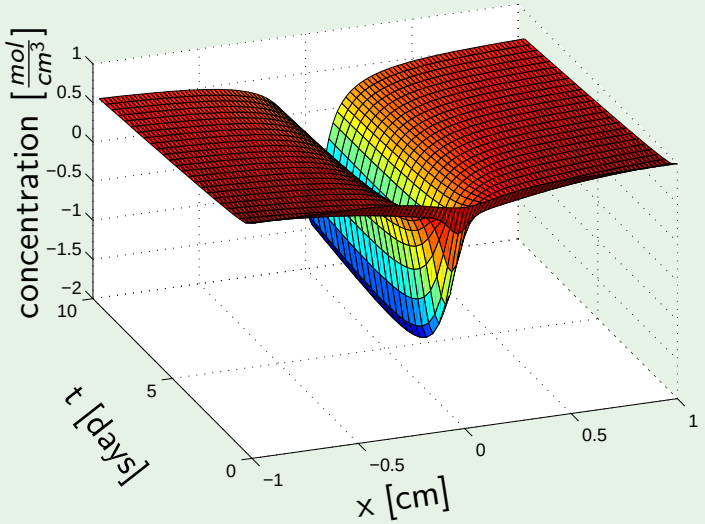

Geometry

Testtube and seramis

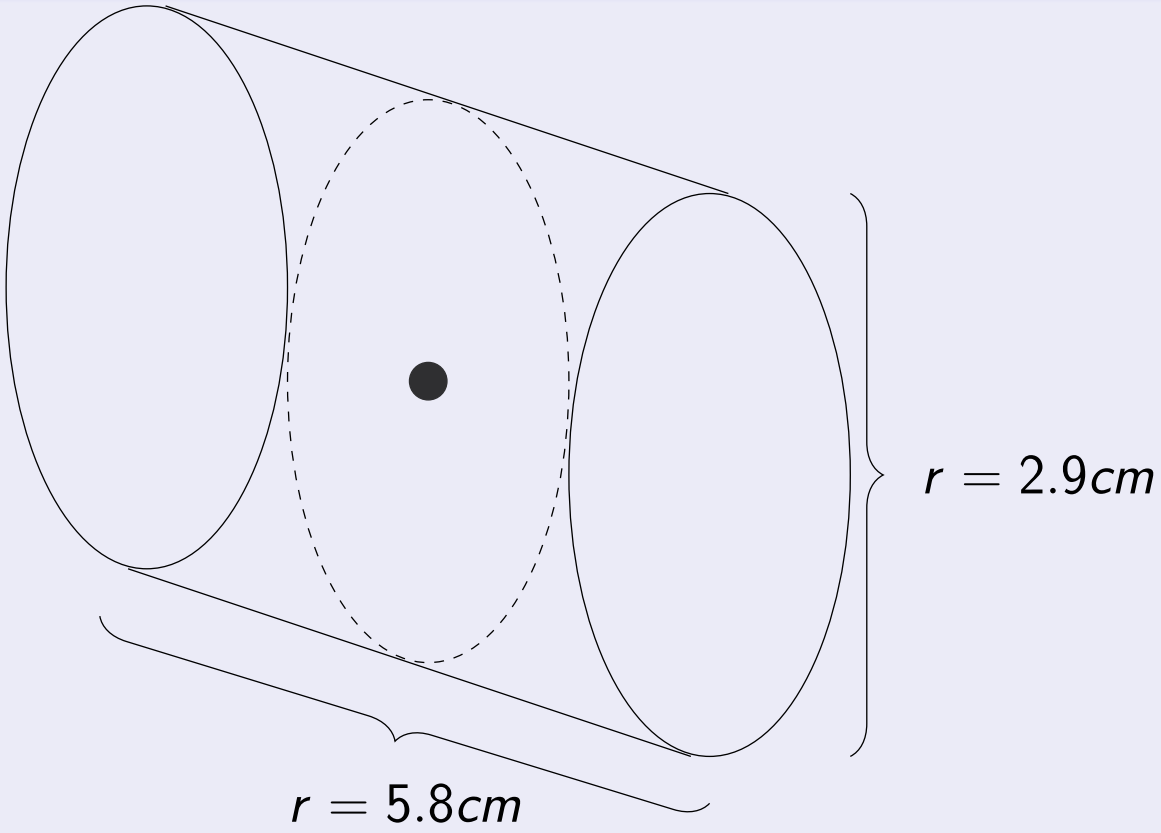

Geometry

Only exermine the local environment

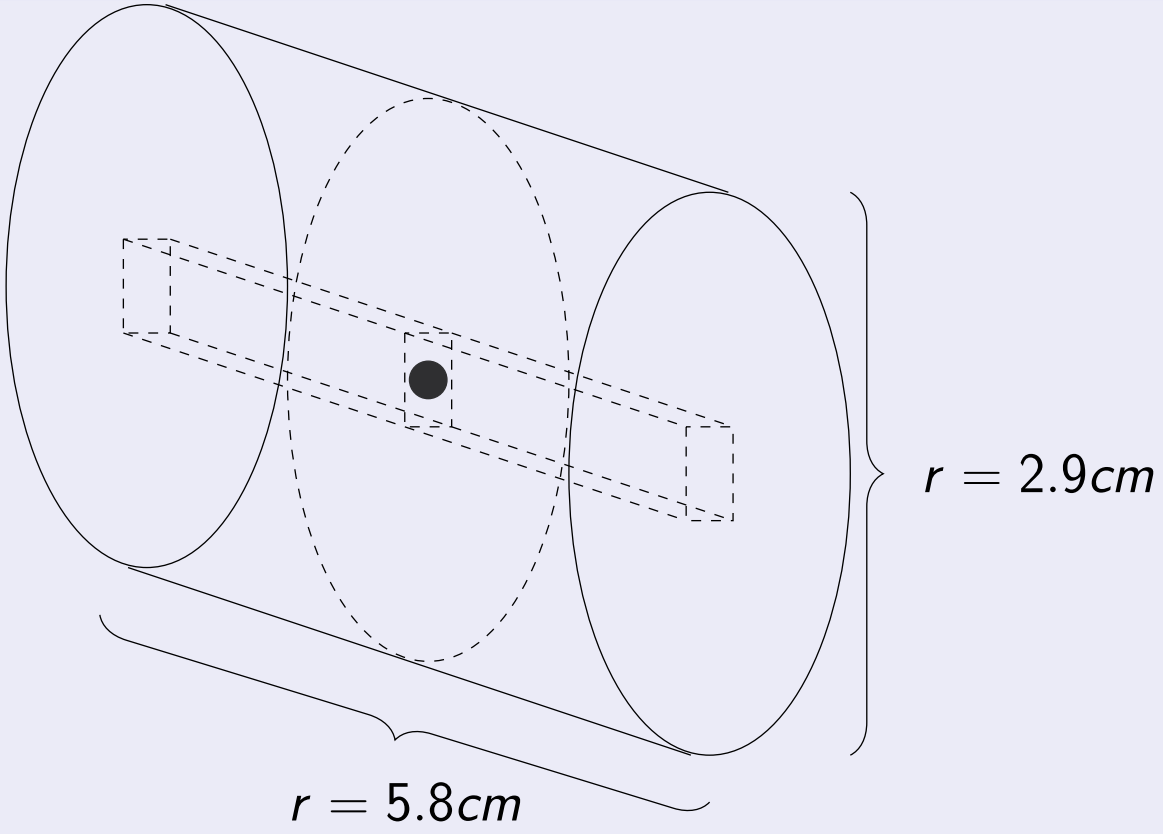

Geometry

Mirrored seramis to fulfill boundary conditions

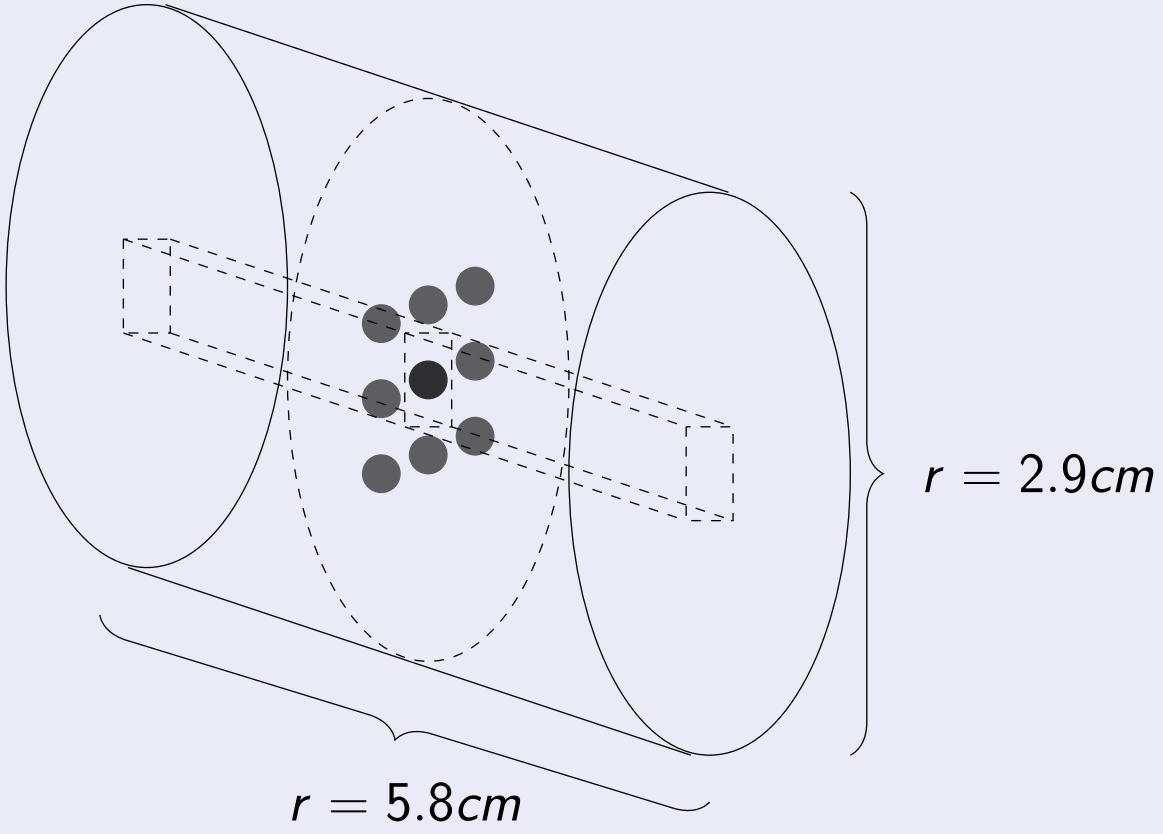

Flow of Data

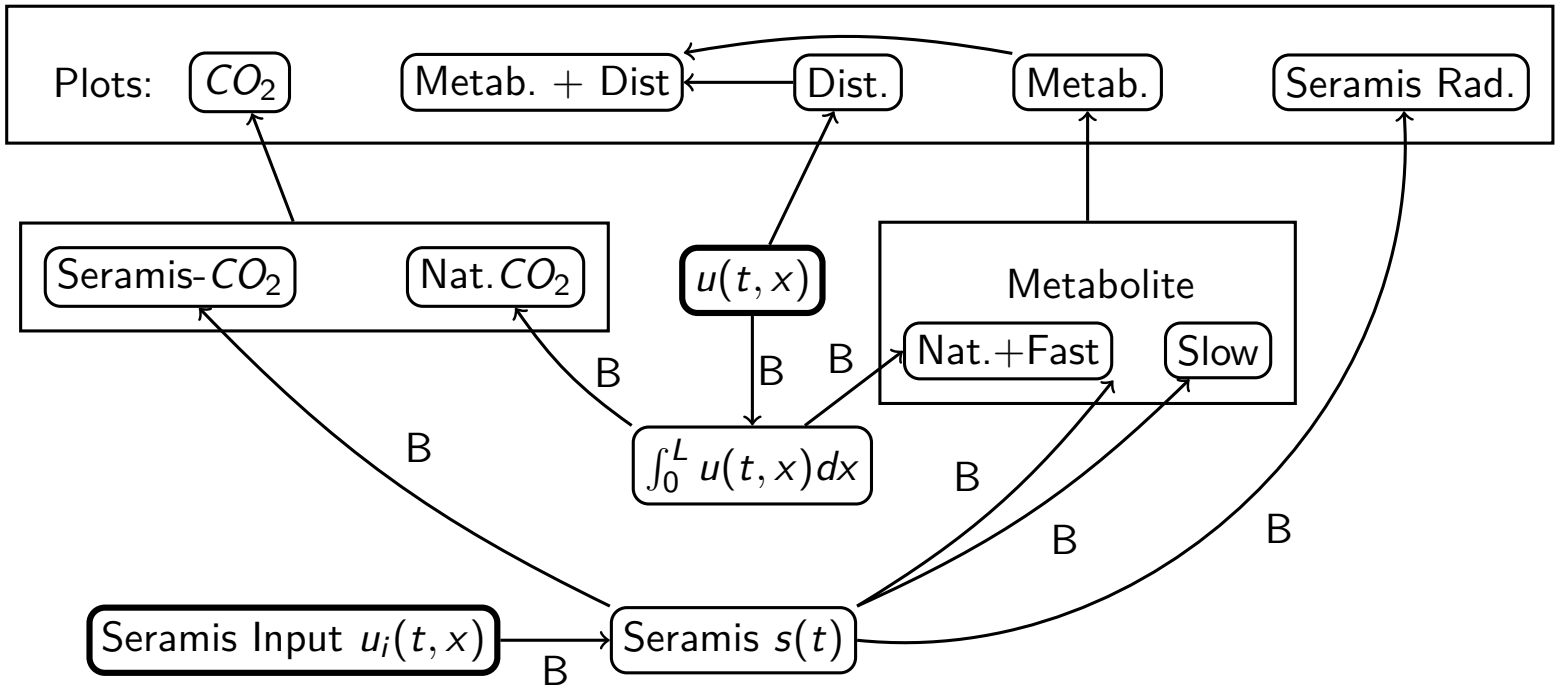
Plots:
CO_2
Metab. + Dist
Dist.
Metab.
Seramis Rad.
Seramis-CO_2
Nat.CO_2
$u(t,x)$
Metabolite
Nat.+Fast
Slow
B
B
B
B
$\int_0^L u(t,x)dx$
B
B
B
Seramis Input $u_i(t,x)$
Seramis $s(t)$
B

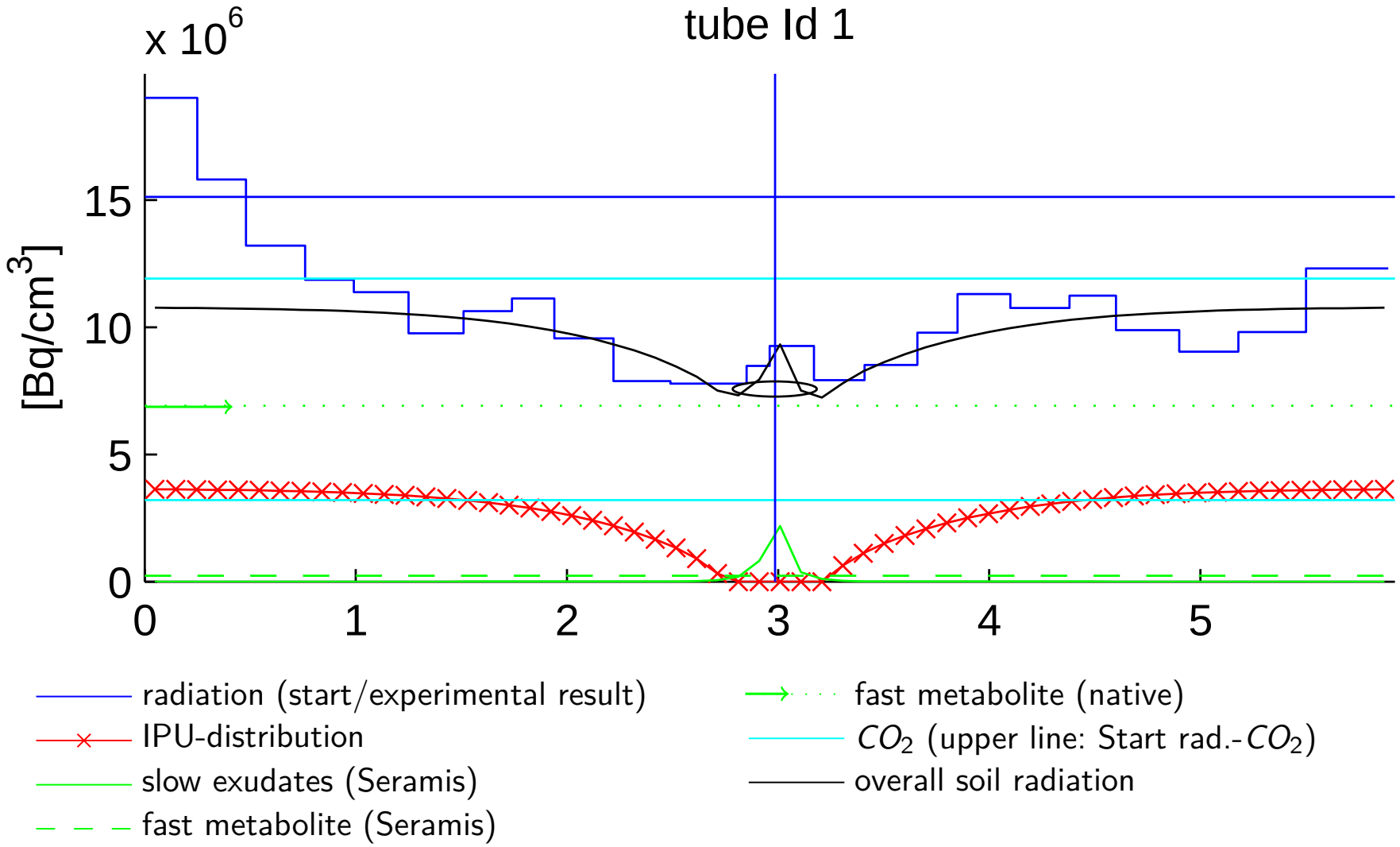
tube Id 1
x 10^6
[Bq/cm^3]
15
10
5
0
0
1
2
3
4
5
radiation (start/experimental result)
IPU-distribution
slow exudates (Seramis)
fast metabolite (Seramis)
fast metabolite (native)
CO_2 (upper line: Start rad.-CO_2)
overall soil radiation

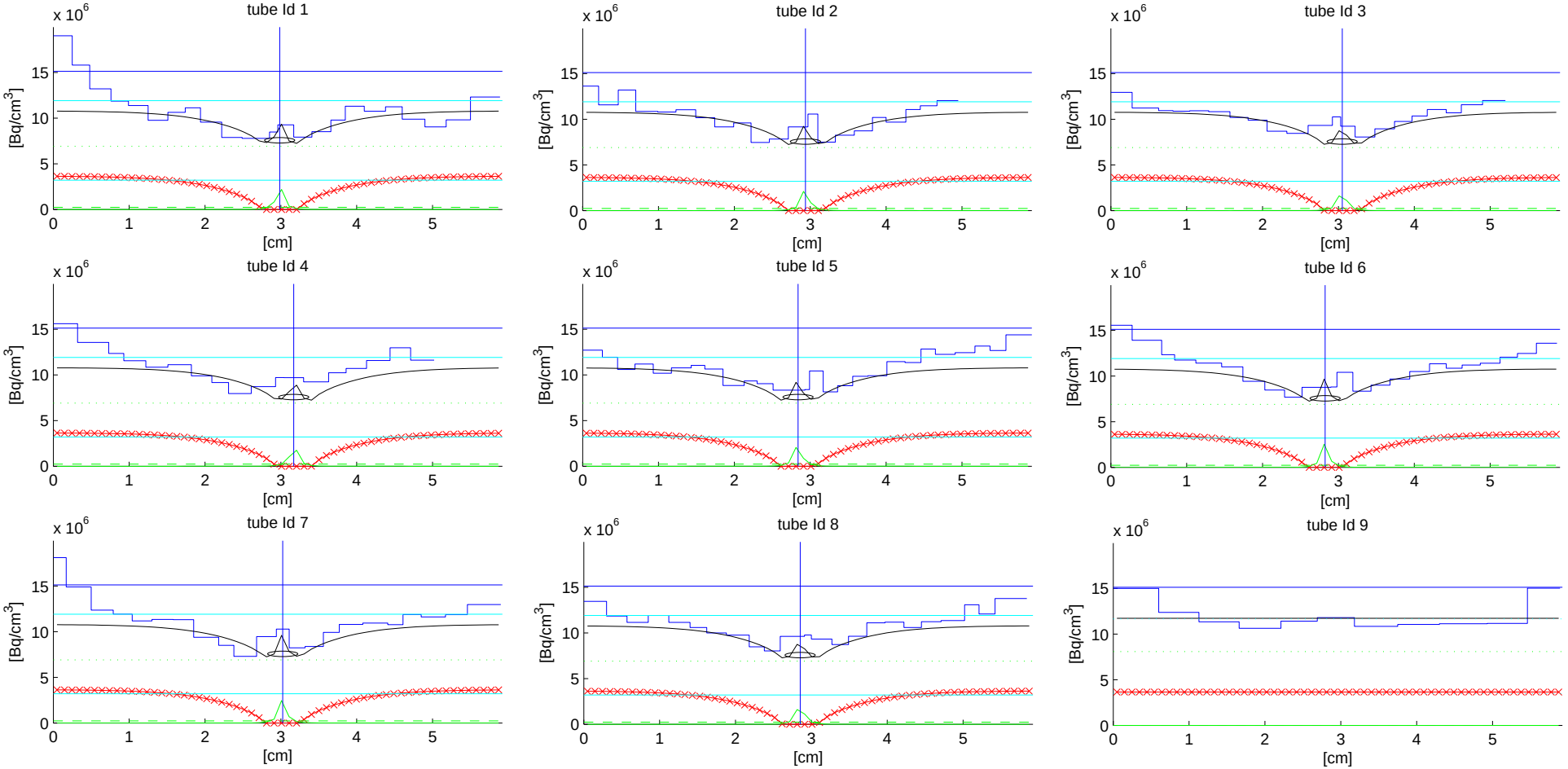
tube Id 1
tube Id 2
tube Id 3
tube Id 4
tube Id 5
tube Id 6
tube Id 7
tube Id 8
tube Id 9
x 10^6
[Bq/cm^3]
[cm]
0
5
10
15
1
2
3
4

Fitting experimental data

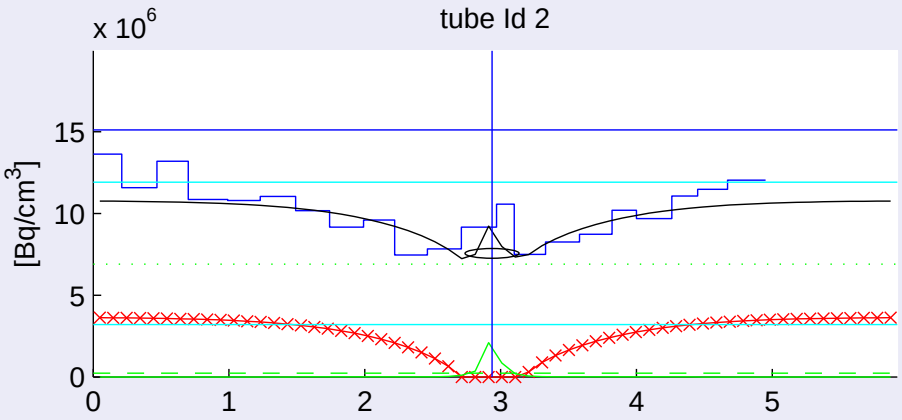

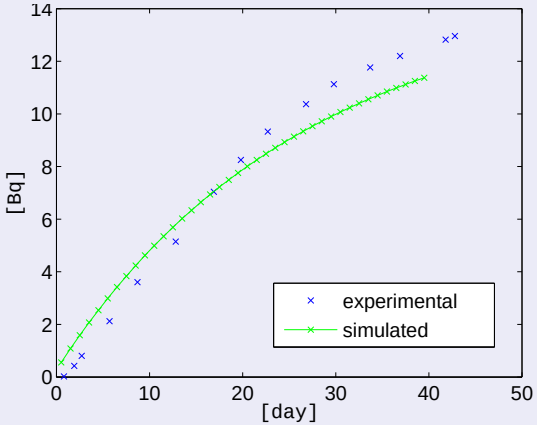

Corresponding parameters 1

- $\gamma = 0.036 \frac{1}{\text{day}}$, $\alpha_0 = 0.15 \frac{\text{cm}}{\text{day}}$, $\beta = 0.01 \frac{1}{\text{day}}$
- $D = 0.021 \frac{\text{cm}^2}{\text{day}}$, $D_s = 0.0005 \frac{\text{cm}^2}{\text{day}}$
- $u_0 = 9.98 \cdot 10^7 \frac{Bq}{cm} \cdot 6.6 cm^2 = 1.5 \cdot 10^6 \frac{Bq}{cm}$

+

- $R_0 = 0.2$ cm
- $\theta = 0.3$
- Grid=0.69 cm

Continuous IPU Introduction

Comparsion to Laplace

- Same $t \to \infty$
- But native degradation

Example: With $\leftrightarrow$ without seramis

$u_0 = 1, D = 0.021, \gamma = 0.03, a_0 = 0.15, R_0 = .2.$
Shown layers $0, -1, -1.5$.
A test integration shows that in layer -3 the square $(-0.5, -0.5)(0.5, 0.5)$ contains

- With Seramis: $0.013394 \frac{mol}{m}$.
- Without Seramis: $0.027718 \frac{mol}{m}$.

Continuous IPU Introduction

Comparsion to Laplace

- Same $t \to \infty$
- But native degradation

Example: With $\leftrightarrow$ without seramis

$u_0 = 1, D = 0.021, \gamma = 0.03, a_0 = 0.15, R_0 = .2.$
Shown layers $0, -1, -1.5$.
A test integration shows that in layer -3 the square $(-0.5, -0.5)(0.5, 0.5)$ contains

- With Seramis: $0.013394 \frac{mol}{m}$.
- Without Seramis: $0.027718 \frac{mol}{m}$.

Continuous IPU Introduction

Geometry

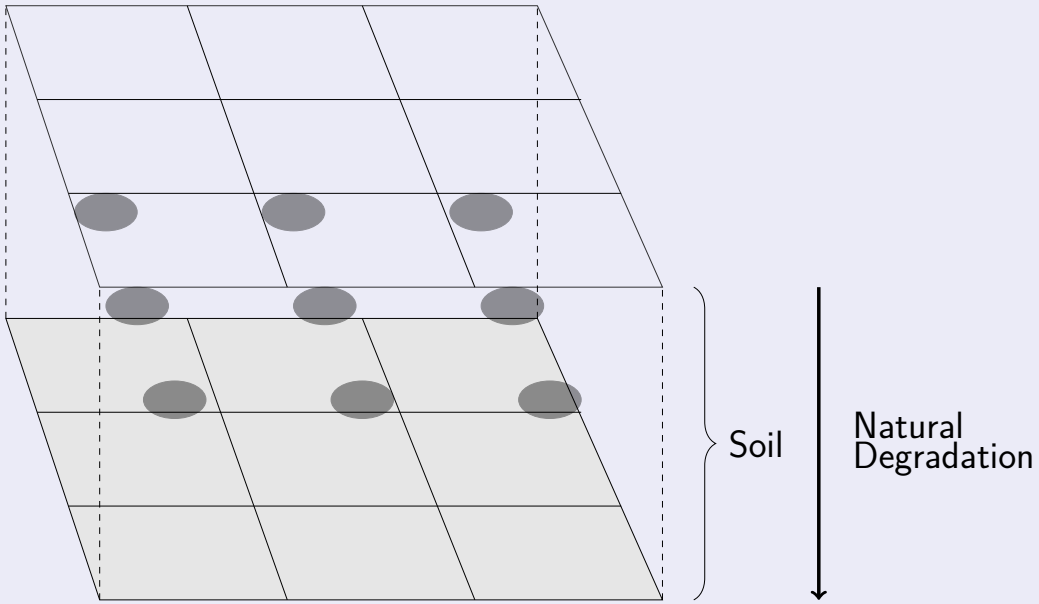

Continuous IPU Introduction

Geometry

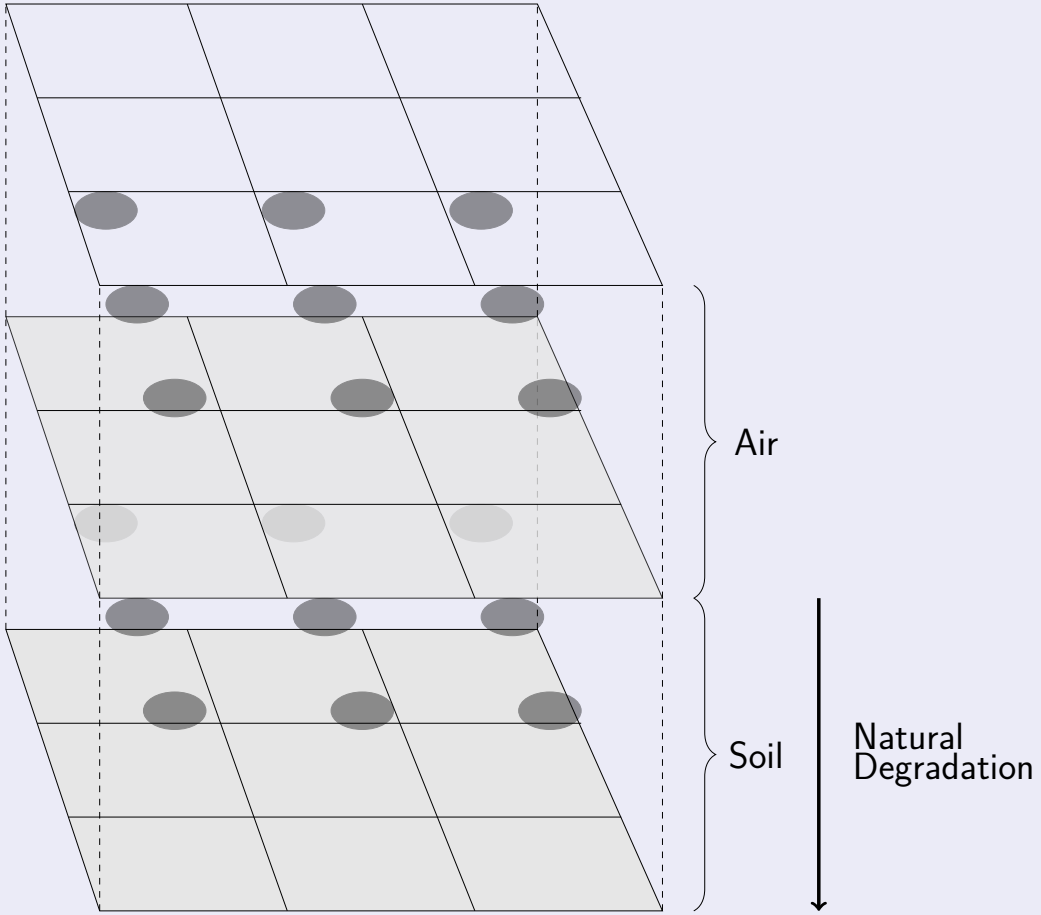

Simulation

- the model influx of native and specialized degradation
- sowing furrows
- diffusion coefficient

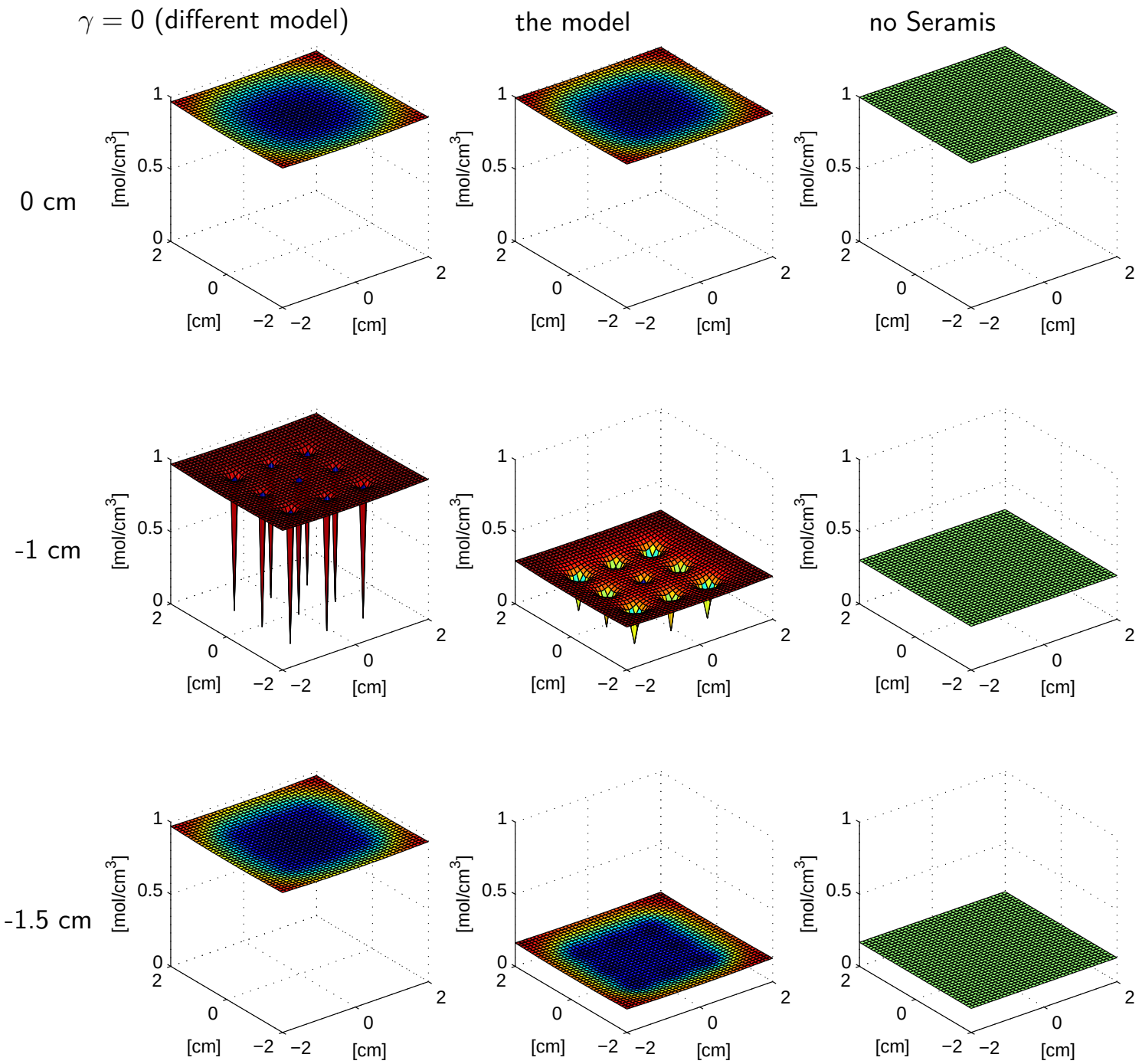
$\gamma = 0$ (different model)
the model
no Seramis
0 cm
-1 cm
-1.5 cm
[mol/cm^3]
[cm]

Sowing Patterns

Furrows and the concentration at -1 cm

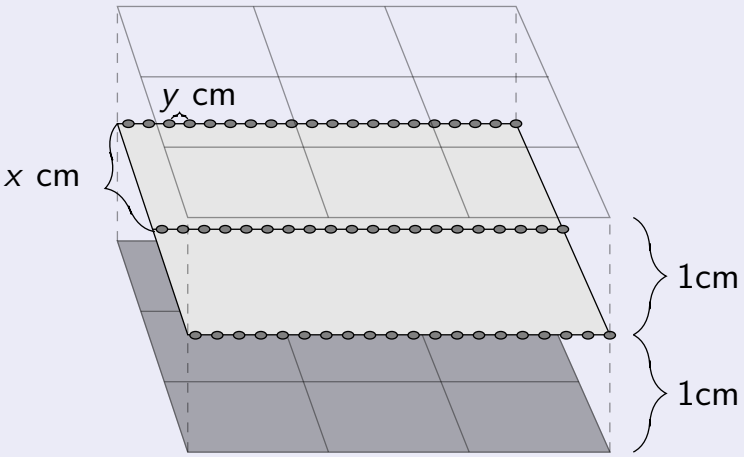

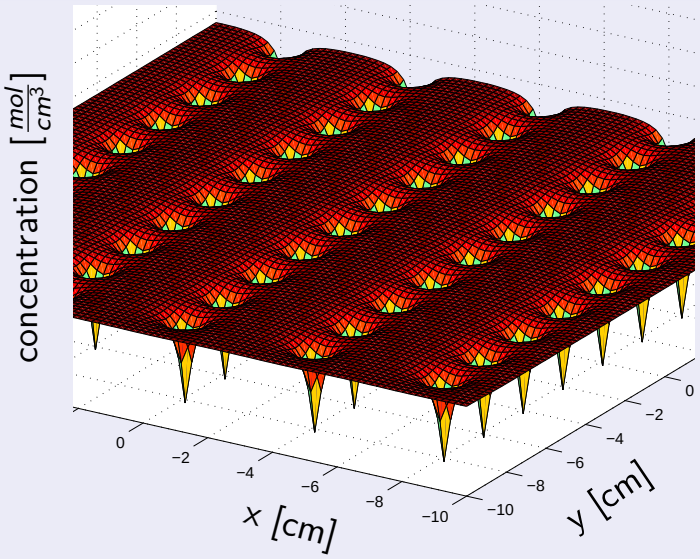

- x = 2 cm
- y = 4 cm

Sowing Patterns

Furrows and the concentration at -2 cm

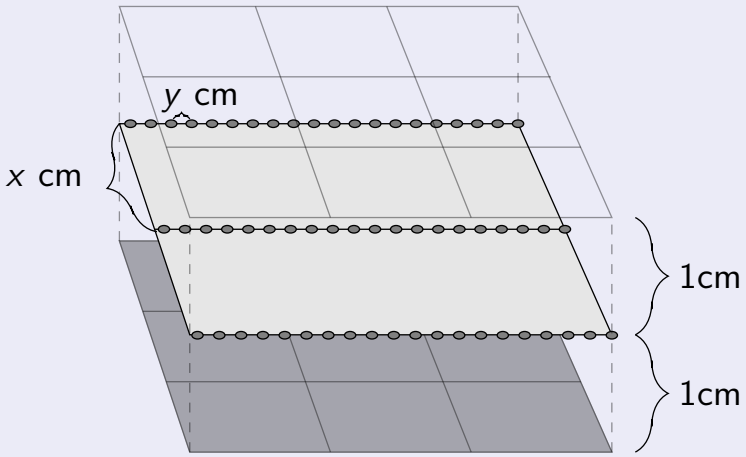

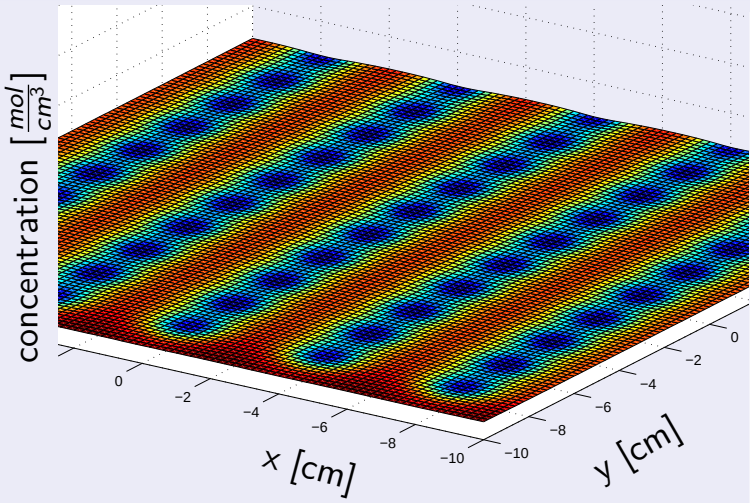

- x = 2 cm
- y = 4 cm

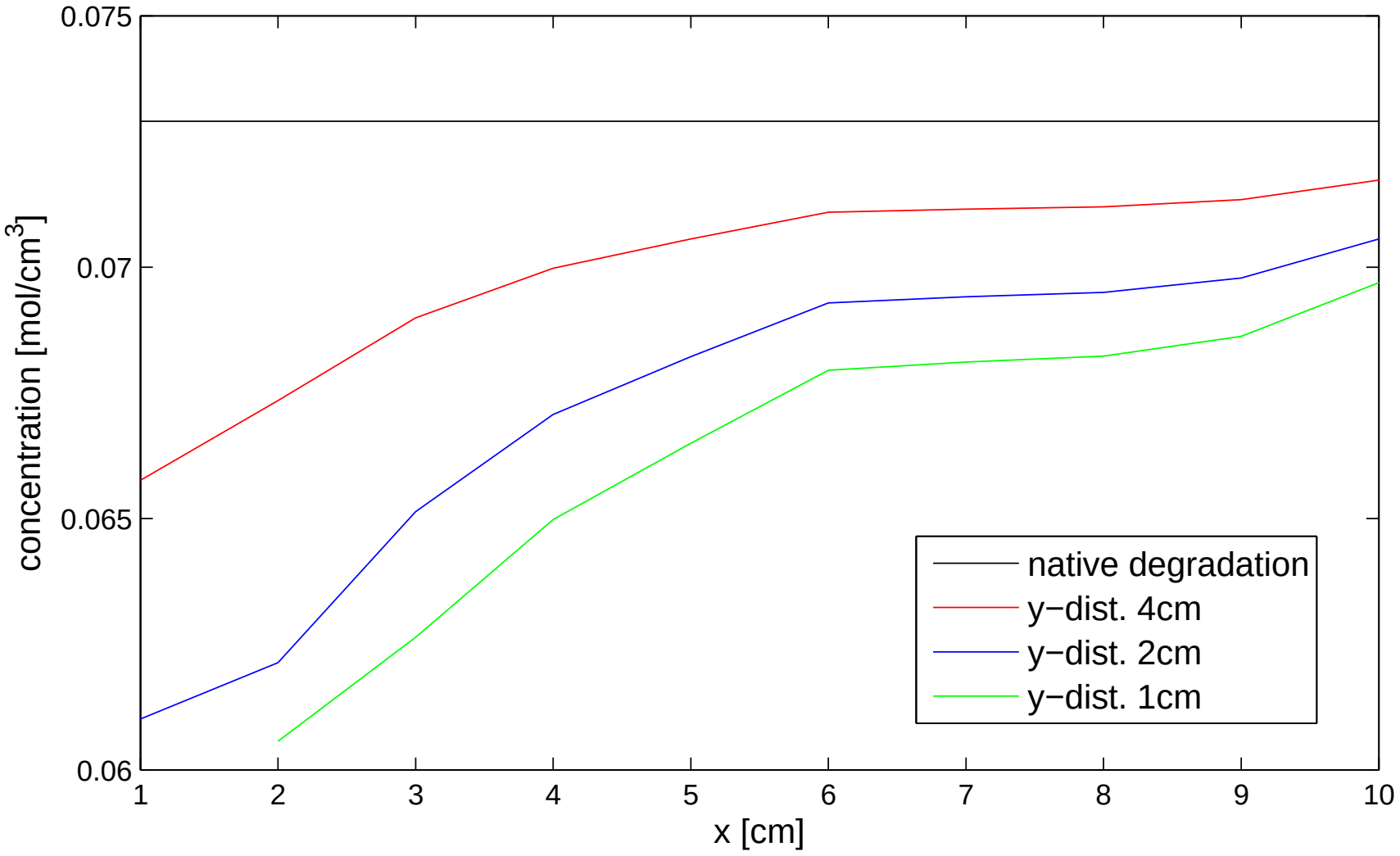
0.075
0.07
0.065
0.06
concentration [mol/cm3]
1
2
3
4
5
6
7
8
9
10
x [cm]
native degradation
y−dist. 4cm
y−dist. 2cm
y−dist. 1cm

Diffusion Coefficients

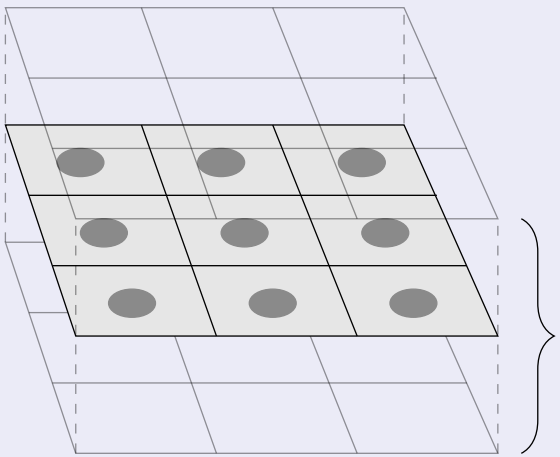

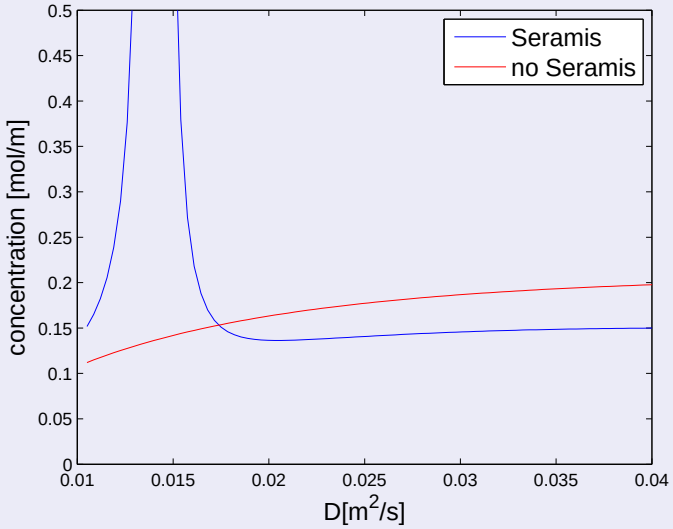

- vary the diffusion coefficient
- keep the influx constant

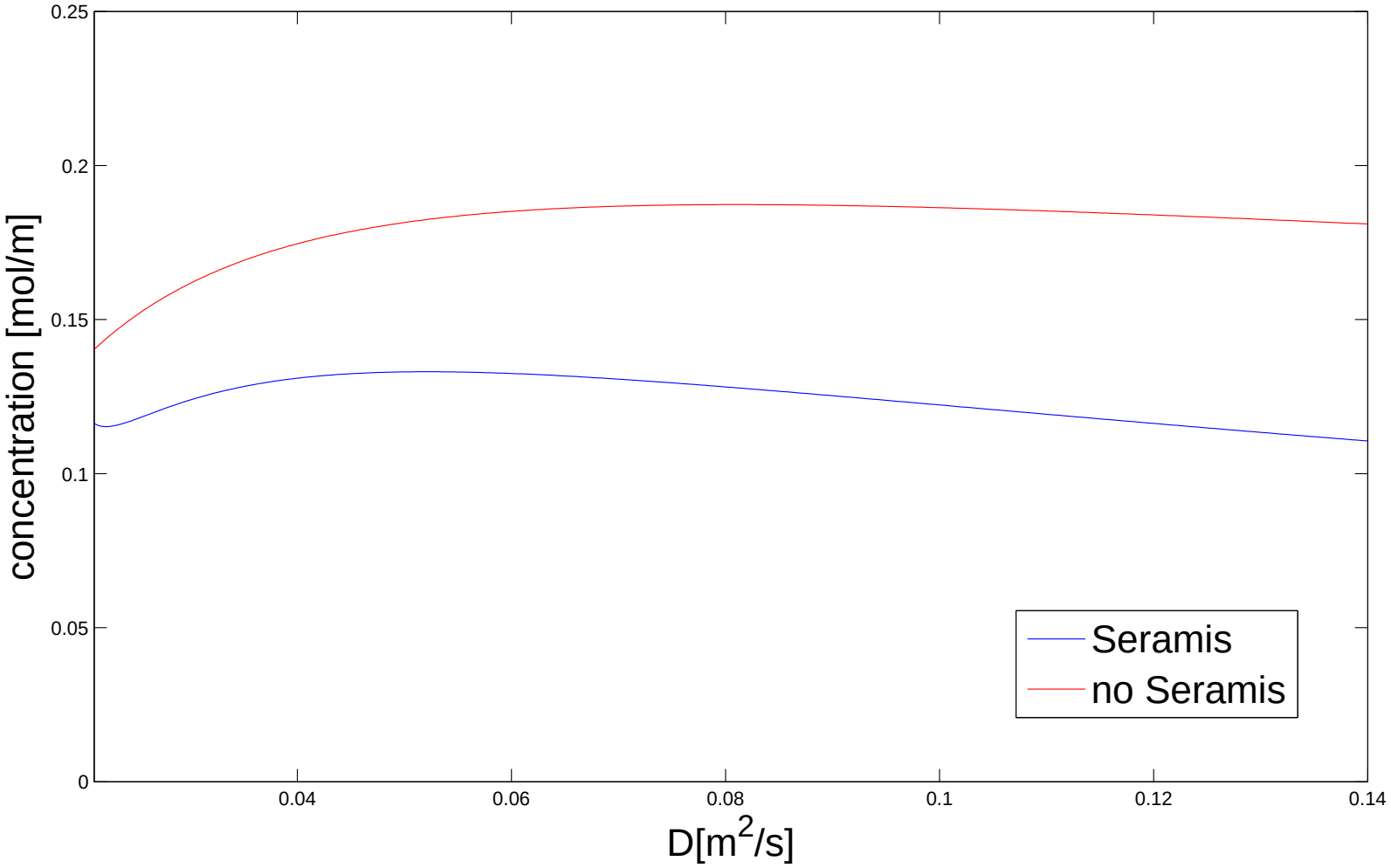
0.25
0.2
0.15
0.1
0.05
0
concentration [mol/m]
0.04
0.06
0.08
0.1
0.12
0.14
D[m2/s]
Seramis
no Seramis

Conclusion

- good fit to the experimental data
- higher diffusion coefficient $\rightarrow$ improved degradation-rate
- higher moisture of soil $\rightarrow$ higher diffusion coefficient

  $\rightarrow$ model: Transport apart from diffusion needed

END

Questions?

Debug: You saw 22 frames!